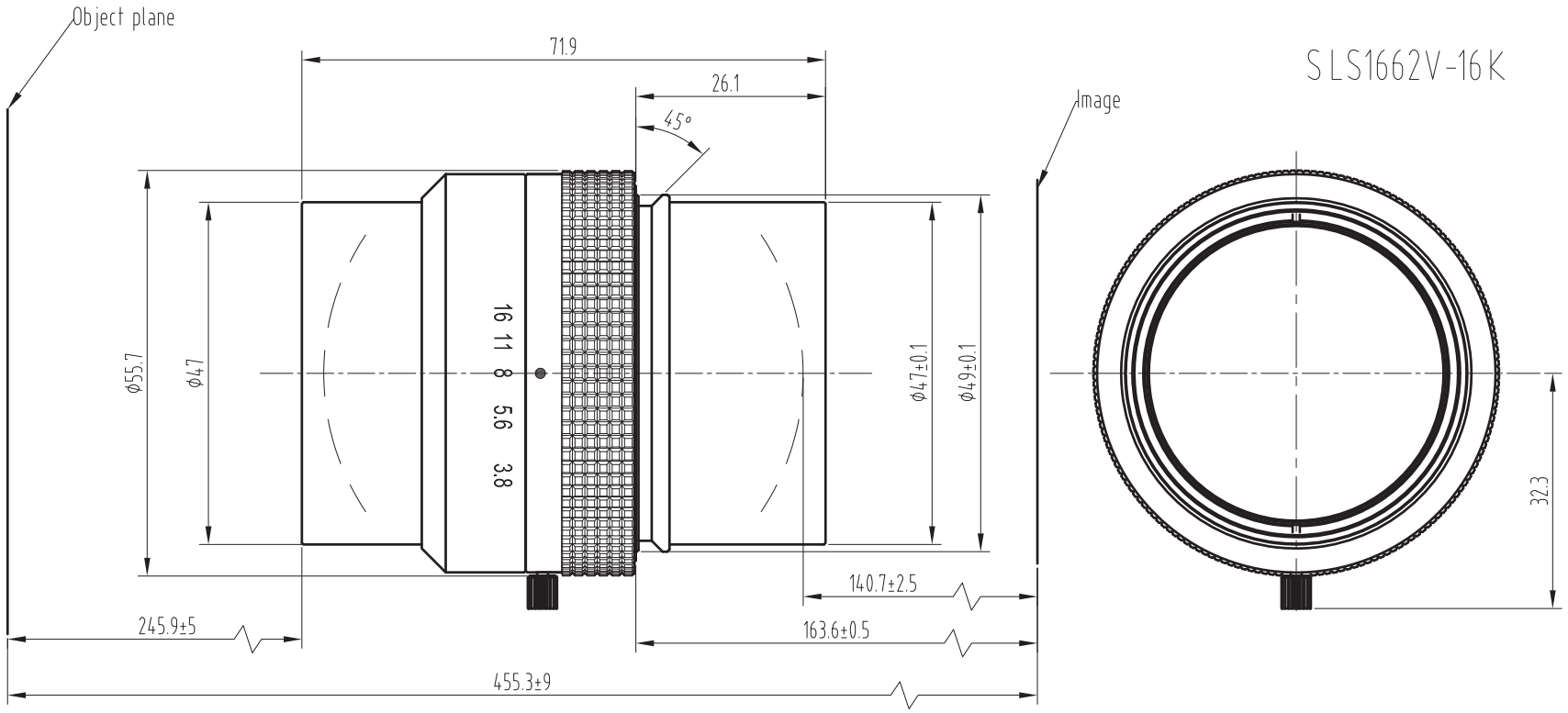


| Main Specification | | | |
|---|---|---|---|
| Magnification | 0.59X | 0.625X | 0.67X |
| Working Distance | 257.04±5 | 245.9±5 | 234.02±5 |
| Image Distance | 136.67±2.5 | 140.7±2.5 | 145.75±2.5 |
| Conjugate Distance | 462.1±9 | 455.3±9 | 448.16±9 |
| Flange Focal Distance | 159.26±0.5 | 163.6±0.5 | 168.34±0.5 |
| Max image | ϕ82 | | |
| F/# | 3.8 | | |
| EFL | 116 | | |
| FOV | 131.1mm | | |
| ENP Diameter | ϕ30.5 | | |
| Distortion | 0.17% | | |
| Structcure | 8G | | |
| IMAGE QUALITY | | | |
| AXIS | ϕ46.2 | ϕ82 | |
| 200lp/mm | 160lp/mm | 160lp/mm | |

| 标记 | 处数 | 更改文件号 | 担当 | 变更日期 |
|---|---|---|---|---|
| | | 倍率参数变更 | | 2014,07,29 |

TOLERANCE:
. LINEARITY TOLERANCES ±0.05
. ANGULAR TOLERANCES ARE±30'
. DRAFT ANGLES AREA±0.5°/SIDE

三角法

| | | | | |
|---|---|---|---|---|
| 设计 | | 2014-07-29 | 名称 | 规格图 |
| 校对 | | | | |
| 审核 | | | 代号 | SLS1662V-16K |
| 批准 | | | | |

| 材料(环保) | 单位 | 比例 |
|---|---|---|
| | mm | 1:1 |
| | | 页码 1/1 |
| | | 版本 V1 |

A4