S43MV5028-20M

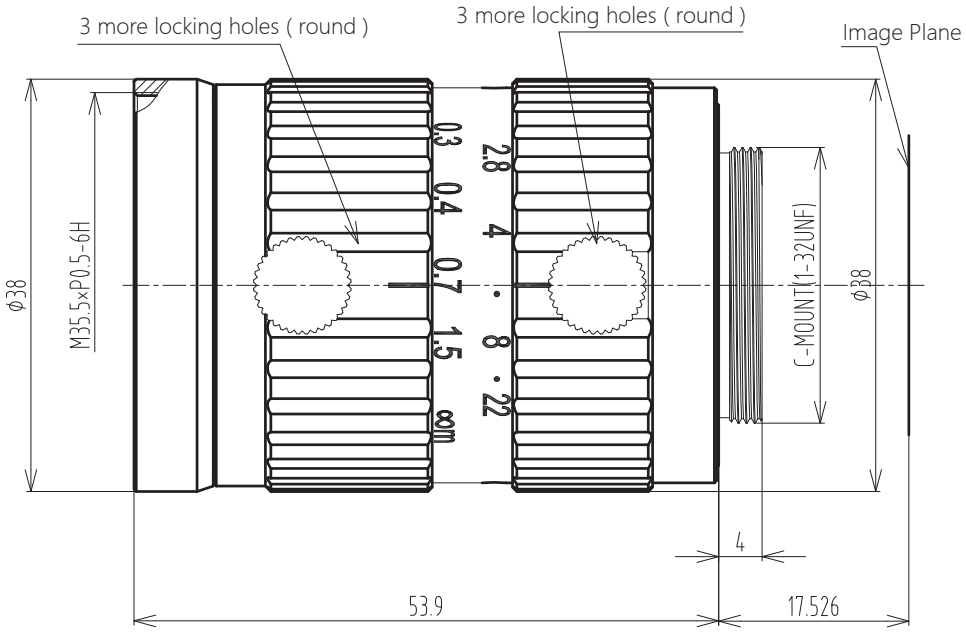


| S43MV5028-20M | | 4/3" F2.8/50 | | | Working distance | Optical Magnification | 4/3" Field of View(mm) | |
|---|---|---|---|---|---|---|---|---|
| Focal Length | | f=50mm | | | mm | | H | V |
| Max Diameter (Ratio) | | F=1:2.8~22 | | | | | | |
| Picture Size | | 4/3"(17.6×13.2mm) | 1"(12.8×9.6mm) | 2/3"(8.8×6.6mm) | | | | |
| Angle | H | 19.8° | 14.6° | 10.1° | 5000 | 0.01X | 1721.3 | 1292.5 |
| | V | 14.9° | 10.9° | 7.5° | 2000 | 0.026X | 682.9 | 512.7 |
| | D | 24.8° | 18.2° | 12.6° | 1000 | 0.052X | 341.4 | 256.2 |
| Object Dimension at 300mm | H | 98.6mm | 71.6mm | 49.3mm | 900 | 0.057X | 306.6 | 230.1 |
| | V | 74mm | 53.8mm | 37mm | 800 | 0.065X | 272.5 | 204.5 |
| | D | 123.4mm | 89.7mm | 61.6mm | 750 | 0.069X | 255.2 | 191.5 |
| Distortion (TV) | | <0.1% | <0.04% | <0.02% | 700 | 0.074X | 237.9 | 178.5 |
| Focus distance(min) | | 0.3m | | | 650 | 0.08X | 220.5 | 165.4 |
| Flange back | | 17.526mm in air | | | 600 | 0.087X | 203.2 | 152.4 |
| Back focus | | 21.1mm(min) | | | 550 | 0.095X | 185.8 | 139.4 |
| Filter screw size | | M35.5xP0.5 | | | 500 | 0.105X | 168.4 | 123.6 |
| Front/Rear Effective Dia | | Front Φ24mm Rear Φ21.7mm | | | 450 | 0.117X | 151 | 113.2 |
| Mount | | C-Mount | | | 400 | 0.132X | 133.5 | 100.1 |
| Temperature Range | | -10~+50°C | | | 350 | 0.152X | 116 | 87 |
| Storage Temperature Range | | -20~+60°C | | | 300 | 0.179X | 98.6 | 73.9 |

TOLERANCE:
. LINEARITY TOLERANCES ±0.05
. ANGULAR TOLERANCES ARE±30'
. DRAFT ANGLES AREA±0.5°/SIDE

三角法

| 版本 | 处数 | 更改文件号 | 担当 | 变更日期 |
|---|---|---|---|---|

| | | | |
|---|---|---|---|
| 设 计 | | 名称 | 规格 |
| 校 对 | | 商品代号 | S43MV5028-20M |
| 审 核 | | | |
| 批 准 | | | |

| 材 料(环 保) | 单 位 | 比 例 |
|---|---|---|
| | mm | 1:1 |

| 页 码 | 版 本 |
|---|---|
| 1/1 | V0 |

A4