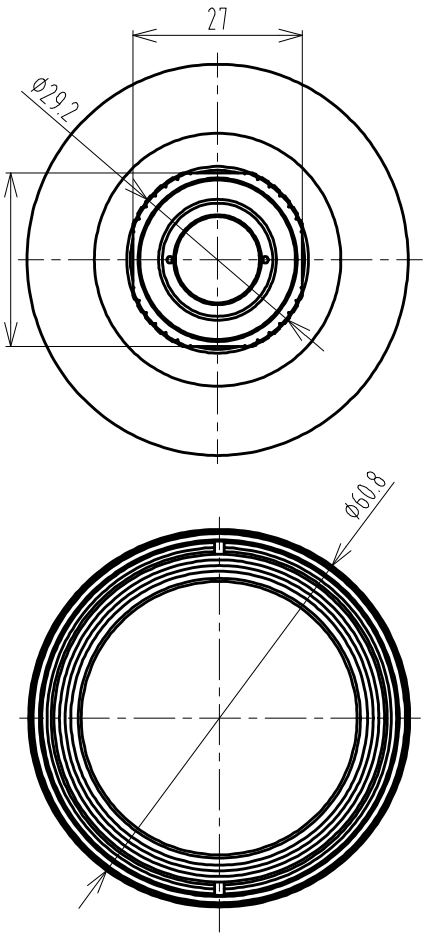

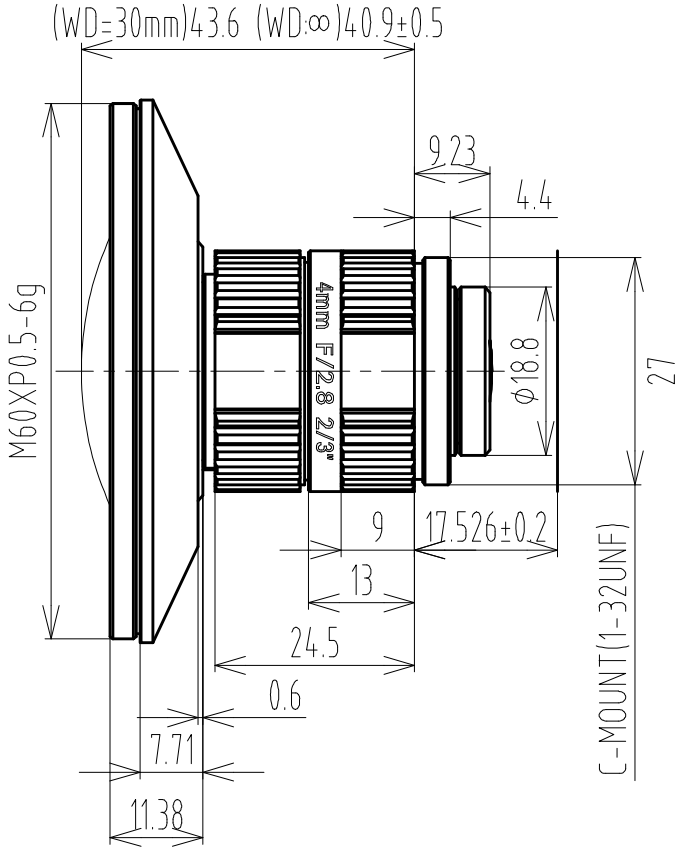

SAVK0428-5M Anti-vibration 4mm 2/3" 5Mp C Mnt			
Focal Length		f=4mm	
F.No		2.8	
Picture Size		2/3"(11x8.44x7.06)	1/1.8"(8.8x7.06x5.29)
Angle(WD=150mm)	H	92.3 °±5°	82.7°±5°
	V	82.7°±5°	66.9°±5°
	D	105.7°±5°	94.5°±5°
Distortion (TV)		≤3%(WD=150mm)	
Object Dimension @ (2/3",WD=150)	H	344.3mm	
	V	290.9mm	
	D	436.3mm	
Focus distance(min)		0.03m	
TTL(FAR~NEAR)		58.4mm~61.1mm	
Back focus(Min)		8mm	
Relative illumination		66%	
Mount		C-Mount	
Temperature Range		-10~+50°C	
Storage Temperature Range		-20~+60°C	
Working Wavelength		可见光	

Working distance	Optical Magnification	2/3 Field of View(mm)	
mm		H	V
1000	0.004	2164.6	1831.7
350	0.011	789.9	668.1
150	0.025	344.3	290.9
90	0.036	237.9	200.8
50	0.055	153.4	129.2
30	0.077	111.6	93.9